Trio GENERATOR

Cummins

MADE IN TURKEY

DATAKOM

D-500-LITE

INTERNET ENABLED GENSET CONTROLLER

International Organization for Standardization ISO 14001:2015

ISO 9001

CE

OUTPUT VALUES

Standby Power	Voltage	230/400
Standby Power	kVA	550
Standby Power	kW	440
Standby Power	Amper	792
Prime Power	Voltage	230/400
Prime Power	kVA	500

Prime Power	kW	400
Prime Power	Amper	720

DIESEL ENGINE

Brand	CUMMINS
Model	QSX15G8
Max. Total Output Pow. (kWm/hp)	500/670
Cylinder Displacement (lt)	14.9
Cylinder Orientation	6 Single Line
Bore x Stroke(mm*mm)	137 X 169
Compression Ratio	17.2:1
Governor Type	Electronic
Rotation	1500 RPM
Aspiration System	Natural
Injection	Direct
Cooling System	Water Cooled
Electrical System(V DC)	24
Oil Capacity (lt)	90
Engine Coolant Capacity (lt)	33
Fuel Cons. %50 (lt/h)	56
Fuel Cons. %75 (lt/h)	80
Fuel Cons. %100 (lt/h)	101

ALTERNATOR

Standby Power (kVa/kw)	550/440
Prime Power (kVa/kw)	500/400
Brand	LEROY SOMER
Output Voltage (V)	231/400
Frequency (Hz)	50
Stationary Vol. Regulation(±)	0,01
Short Circuit Current	%300 (10 sec)
Insulation	H
Protection	IP23
E ciency (%)	92
Overloading	110% for 1 hour
Power Factor (cos Q=0.8)	0,8
Tot. Harmonic Dist. Rate	<1 %
Connection Type	Star
Number of Pole	4
Number of Bearing	Single

DIMENSIONS & WEIGHT

Without Canopy	Width	1500 mm
Without Canopy	Length	3500 mm
Without Canopy	High	2200 mm
Without Canopy	Weight	3800 kg
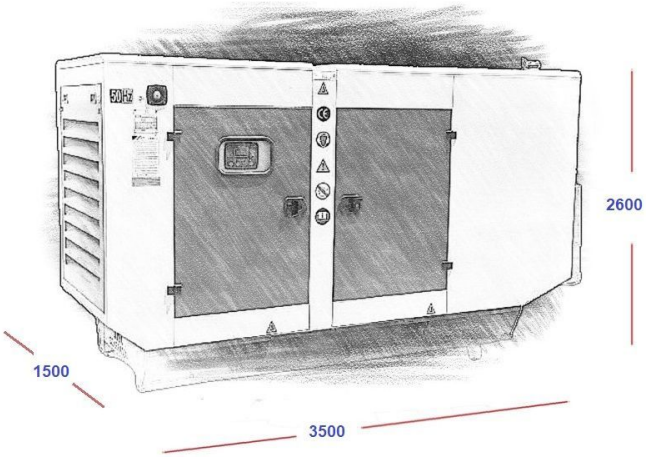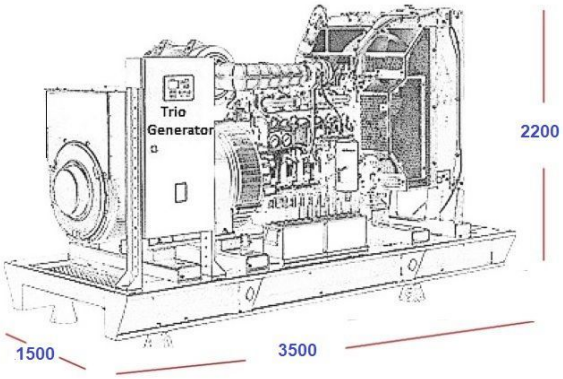
Without Canopy	Fuel Tank Capacity	660 lt
With Canopy	Width	1500 mm
With Canopy	Length	3500 mm
With Canopy	High	2600 mm
With Canopy	Weight	4800 kg
With Canopy	Fuel Tank Capacity	660 lt